# CITY OF LAKEWOOD
# PERMIT PROCESS ASSISTANCE HANDOUT

Permits – Civic Center North – 480 S Allison Pkwy – 303.987.7500

## RESIDENTIAL DECK

All decks, regardless of height above the ground, require a permit.

Printable copies of permit applications and contractor registration applications are available on our website or you may pick up copies at the address above.

**Contractors and Homeowners as General Contractors:**

- Homeowners may obtain the building permit for a deck and perform the work on their own single-family detached residence.
- Registered contractors must obtain the building permit and perform the work for a deck on a townhome or similar attached residential dwelling.
- Any person hired to perform work must have the required registration to do work within the City of Lakewood.

**Submittal Requirements:**

- Provide a completed permit application.
- Homeowner Association approval is required for decks on townhomes and condominiums. Provide approval letter with permit application.
- Provide two complete sets of the following plans.
    1. Plot Plan drawn to 1" = 30' or larger standard scale
        - See page 2 for an example plot plan
        - You may use an Improvement Location Certificate (ILC) to complete the plan. Use the same scale as the ILC to add the required information.
        - Include north arrow and scale used
        - Provide the property address and names of all adjacent streets
        - Show all property lines and easements with dimensions
        - Show footprint of existing home and new deck
        - Show all existing accessory buildings and label type and dimensions (e.g. 10' x 12' shed)
        - Show all existing decks with dimensions
        - Show all walks, drives and patios
        - Provide dimensions on all sides from the new deck to property lines and any other structures on the lot
    2. Deck Plan drawn to ¼" = 1' or larger standard scale
        - See page 3 for an example deck plan
        - Provide plan view (bird's eye view) framing plan
        - Show dimensions of deck
        - Show location of deck piers
        - Label material, size and spacing of joists and beams (e.g. Hem Fir #2, 2x8 @ 16" O.C.)
        - Label material and size of deck surface to be used (e.g. redwood 2 x 6, Trex®, etc.)
        - Provide layout of stairs and landings
    3. Deck Section
        - See page 4 for examples of deck section details
        - Indicate height of deck from ground to deck surface
        - Show depth and size of deck piers
        - Label material and size of posts
        - Indicate attachment methods for posts, beams, ledgers, joists and cantilevers
        - Show railing (guard) if deck surface is more than 30" above the ground. Refer to the Railing handout for additional information.
    4. Stair Section
        - Provide stair section if stairs are to be built.
        - Refer to the Stair handout for additional information and an example section.

## General Information:

- Decks must be designed for a minimum 40 psf live load and a minimum 50 psf total load.
- All deck framing must be pressure-treated wood, Redwood or Western Cedar.
- Posts must be set on a post anchor at least 1" above the pier.
- Ledger boards must not be anchored through brick or masonry veneer.
- Joist hangers must be nailed with the appropriate hanger nails. Screws cannot be used for any structural connections.
- Lateral load bracing is required. See diagrams for further information.
- Railings (guards) are required at all locations where the deck surface is more than 30" above the ground at any point measured within 36" horizontally of the edge of the deck walking surface. Refer to the Railing handout for further information and details.
- Additional plans and engineering will be required if the deck will support a hot tub or roof above. Contact the building permit office for specific details.
- Provide a registered engineer's analysis of the existing and any new loads that will be imposed when attaching a deck to a cantilever. The engineer must also provide connection and support details to attach to and support the new deck from a cantilever. Contact the building permit office for specific details.

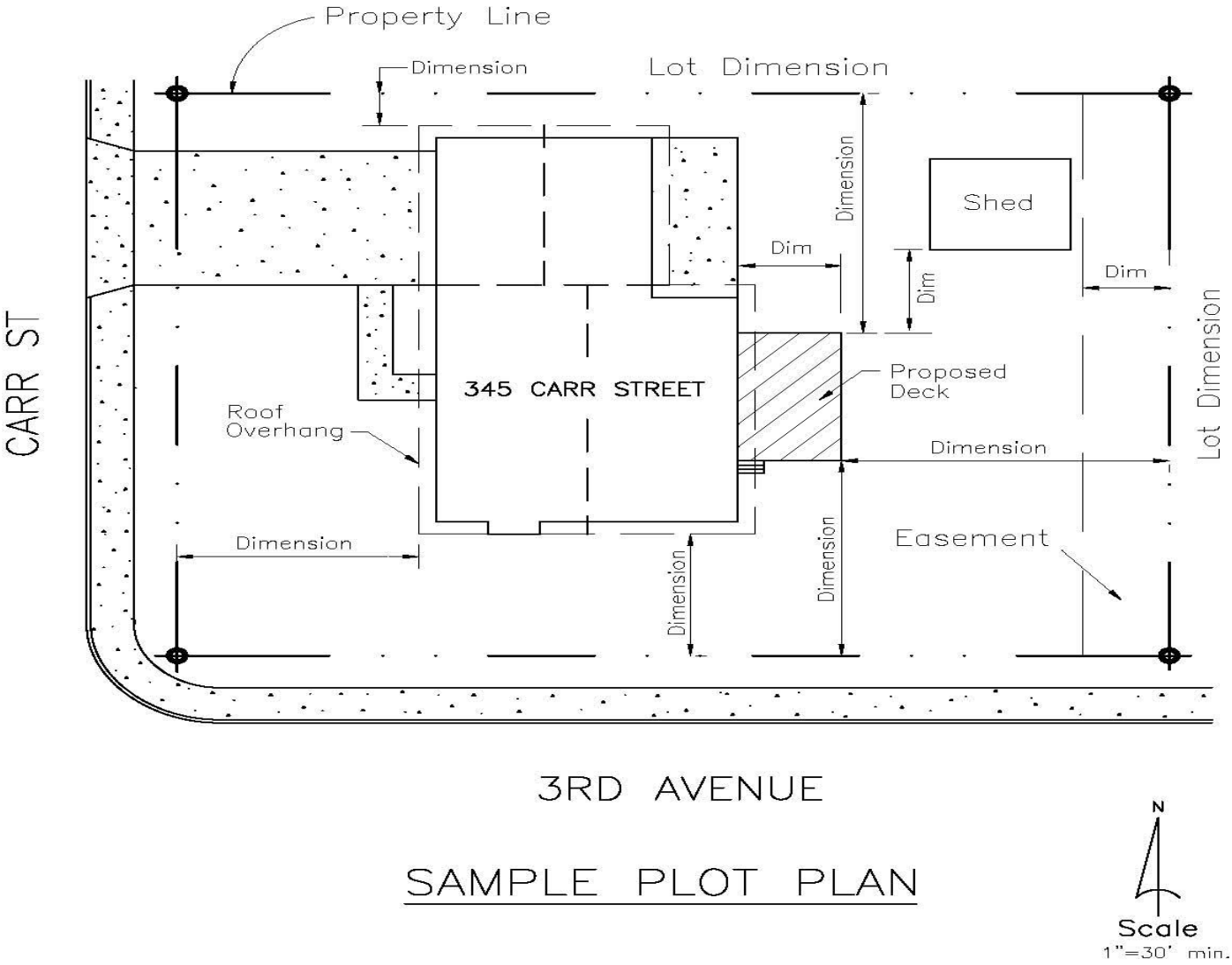


SAMPLE PLOT PLAN

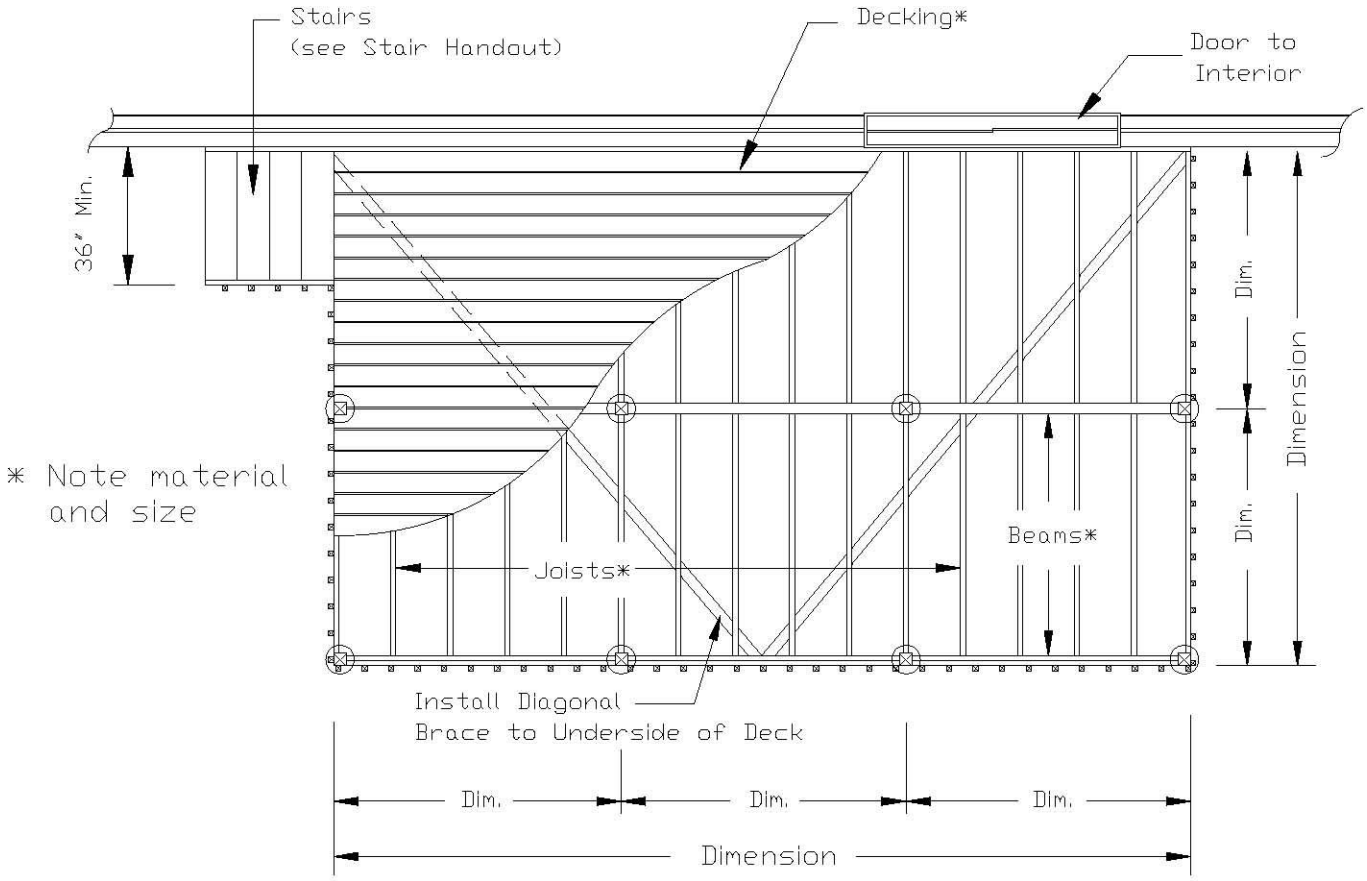


## SAMPLE DECK PLAN

### JOIST SPAN TABLE

| | Pressure Treated Wood Including: Douglas Fir/Hemlock Fir #2/ Larch/ or Spruce-Pine Fir | Redwood or Western Cedar |
|---|---|---|
| | MAXIMUM JOIST SPAN | MAXIMUM JOIST SPAN |
| 2X8 @ 24”<br>2X8 @ 16”<br>2X8 @ 12” | 9’ 01”<br>11’ 01”<br>12’ 06” | 8’ 08”<br>10’ 07”<br>11’ 08” |
| 2X10 @ 24”<br>2X10 @ 16”<br>2X10 @ 12” | 11’ 01”<br>13’ 07”<br>15’ 08” | 10’ 07”<br>13’ 00”<br>14’ 11” |
| 2X12 @ 24”<br>2X12 @ 16”<br>2X12 @ 12” | 12’ 10”<br>15’ 09”<br>18’ 00” | 12’ 04”<br>15’ 01”<br>17’ 05” |

- Floors and Decks must be designed for a minimum 40 psf live load and 50 psf total load
- Engineered design required for cantilevers exceeding 24”
- All deck framing materials are required to be pressure treated wood or Redwood or Western Cedar

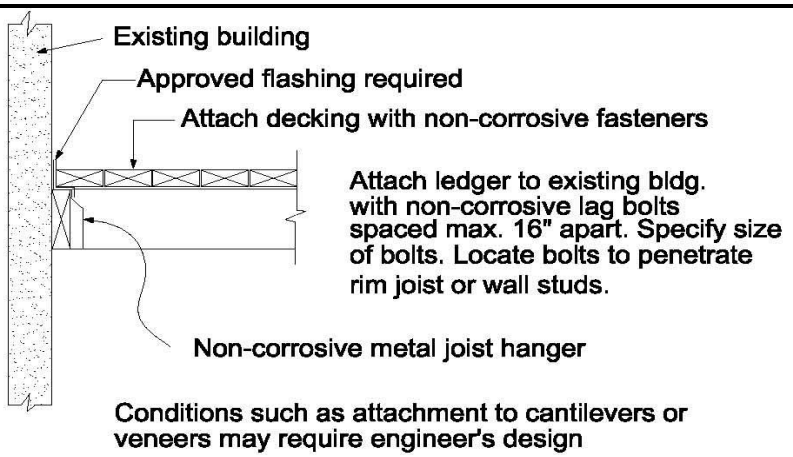


LEDGER & JOIST ATTACHMENT DETAIL (1)

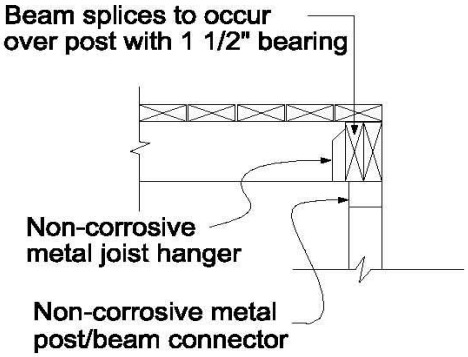


POST TO FLUSH BEAM CONNECTION DETAIL (3A)

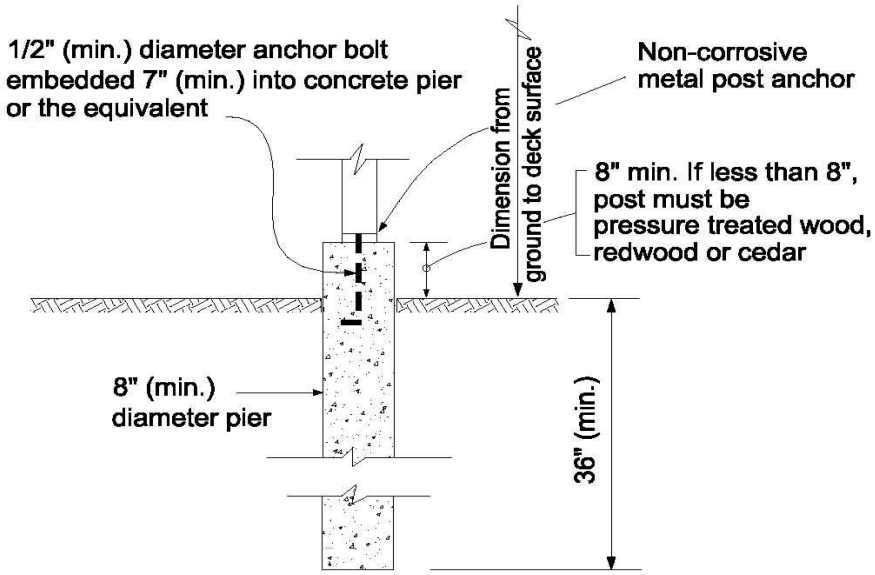


PIER AND POST BASE DETAIL (2)

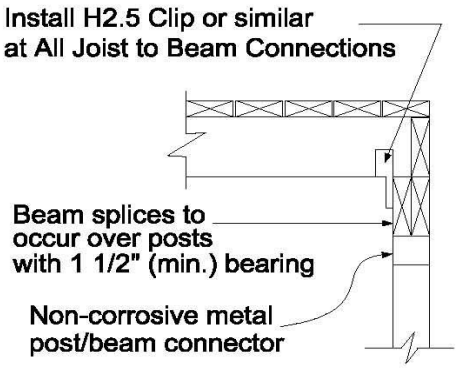


POST TO DROP BEAM CONNECTION DETAIL (3B)

## Deck Section

- Combine details (1) and (2) with appropriate detail (3)
- If deck surface is over 30" above the ground, show required railings. Refer to the Railing handout.

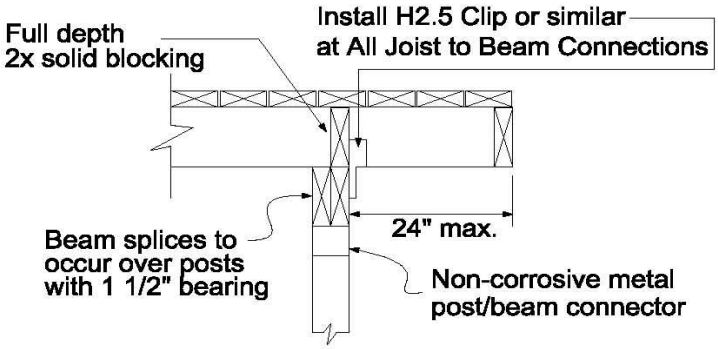


POST TO DROP BEAM WITH CANTILEVER CONNECTION DETAIL (3C)